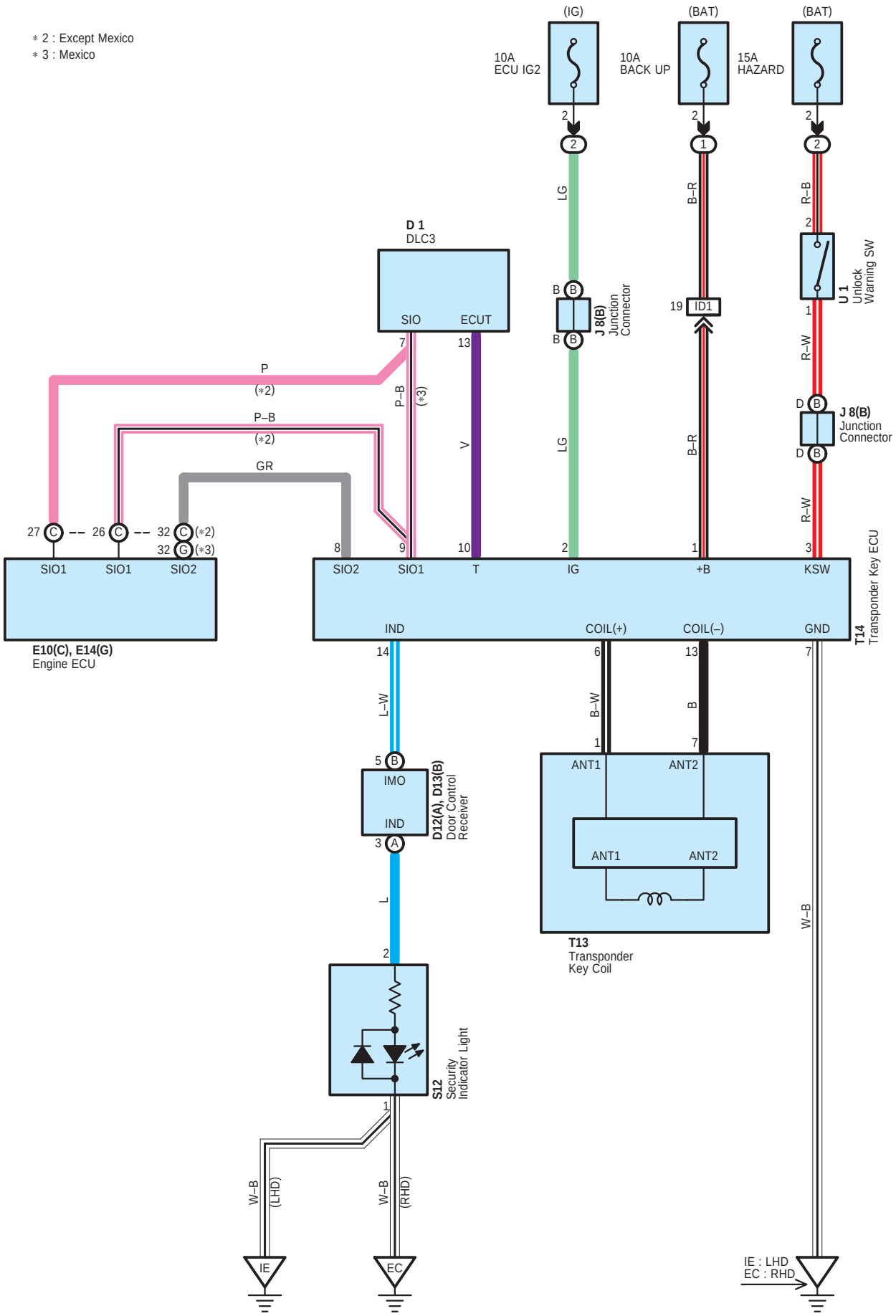
∗ 2 : Except Mexico
∗ 3 : Mexico
(IG)
(BAT)
(BAT)
10A
ECU IG2
10A
BACK UP
15A
HAZARD
D 1
DLC3
SIO
ECUT
J 8(B)
Junction
Connector
U 1
Unlock
Warning SW
ID1
P
(∗2)
P–B
(∗3)
P–B
(∗2)
GR
V
LG
B–R
R–B
R–W
27
26
32
(∗2)
32
(∗3)
SIO1
SIO1
SIO2
E10(C), E14(G)
Engine ECU
SIO2
SIO1
T
IG
+B
KSW
IND
COIL(+)
COIL(–)
GND
T14
Transponder Key ECU
L–W
B–W
B
IMO
IND
D12(A), D13(B)
Door Control
Receiver
ANT1
ANT2
ANT1
ANT2
T13
Transponder
Key Coil
L
W–B
S12
Security
Indicator Light
W–B
(LHD)
W–B
(RHD)
IE
EC
IE : LHD
EC : RHD

: Parts Location

Code		See Page	Code		See Page	Code	See Page
D1		28 (LHD)	E10	C	36 (*5)	T13	37 (*5)
		36 (*5)	E14	G	28 (LHD)	T14	29 (LHD)
D12	A	28 (LHD)	J8	B	29 (LHD)		37 (*5)
		36 (*5)			37 (*5)	U1	29 (LHD)
D13	B	28 (LHD)	S12		29 (LHD)		37 (*5)
		36 (*5)			37 (*5)		
E10	C	28 (LHD)	T13		29 (LHD)		

: Relay Blocks

Code	See Page	Relay Blocks (Relay Block Location)
1	22	Engine Room R/B (Engine Compartment Right)
2	23 (LHD)	Fuse Block (Left Kick Panel)
	23 (RHD)	Fuse Block (Right Kick Panel)

: Connector Joining Wire Harness and Wire Harness

Code	See Page	Joining Wire Harness and Wire Harness (Connector Location)
ID1	44 (LHD)	Engine Room Main Wire and Instrument Panel Wire (Right Kick Panel)
	48 (*5)	Engine Room Main Wire and Instrument Panel Wire (Cowl Side Panel RH)

: Ground Points

Code	See Page	Ground Points Location
EC	46 (*3)	Left Fender Apron
	47 (*4)	
IE	44 (LHD)	Cowl Side Panel LH

* 1 : LHD 3SZ–VE * 2 : LHD K3–VE * 3 : RHD 3SZ–VE * 4 : RHD K3–VE * 5 : RHD w/ Heater * 6 : RHD w/o Heater